Product datasheet

Specifications

Green Premium™

sub-base - soldered solid state output relay ABE7 - 16 inputs - 48 V DC

Local distributor code:

402703675 ABE7S16E2E1

EAN Code: 3389110546255

Main

Range Of Product	Modicon ABE7
Product Or Component Type	Solid state input relay sub-base
[Us] Rated Supply Voltage	24 V DC (PLC end) 48 V DC (sensor end)
Number Of Channels	16
Number Of Terminal Per Channel	2
Connections - Terminals	Screw type terminals, 1 x 0.09...1 x 1.5 mm², 0.09…1.5 mm² (AWG 28...AWG 16) flexible with cable end Screw type terminals, 1 x 0.14...1 x 2.5 mm², 0.14…2.5 mm² (AWG 26...AWG 12) solid Screw type terminals, 1 x 0.14...1 x 2.5 mm², 0.14…2.5 mm² (AWG 26...AWG 14) flexible without cable end Screw type terminals, 2 x 0.09...2 x 0.75 mm², 0.09…0.75 mm² (AWG 28...AWG 20) flexible with cable end Screw type terminals, 2 x 0.2...2 x 2.5 mm², 0.2…2.5 mm² (AWG 24...AWG 14) solid

Complementary

Terminal Block Type	Removable
Supply Voltage Limits	19…30 V DC (PLC end) conforming to IEC 61131-2
Isolation Plc/Operative Part	Yes
Protection Type	Internal fuse 1 A 5 x 20 mm fast blow PLC end Adjustable by external fuse fast blow sensor end
Fixing Mode	By clips (35 mm symmetrical DIN rail) By screws (solid plate with fixing kit)
Current Per Channel	0.013 A
Current State 1 Guaranteed	>= 6 mA (sensor end)
Voltage State 1 Guaranteed	>= 30 V for sensor end
Maximum Switching Current	15 mA (PLC end)
Minimum Switching Current	1 mA for PLC end
Response Time	<= 0.05 ms from state 0 to 1 <= 0.4 ms from state 1 to 0
Switching Frequency	<= 1000 Hz duty cycle: 50 %
[Uimp] Rated Impulse Withstand Voltage	2.5 kV conforming to IEC 60947-1
[Ui] Rated Insulation Voltage	2000 V
Installation Category	II conforming to IEC 60664-1
Tightening Torque	0.6 N.m with flat Ø 3.5 mm screwdriver
Net Weight	0.37 kg

Disclaimer: This documentation is not intended as a substitute for and is not to be used for determining suitability or reliability of these products for specific user applications

Environment

Dielectric Strength	2000 V at 50/60 Hz conforming to IEC 60947-1
Product Certifications	CSA UL DNV GL EAC
Standards	IEC 61131-2 Type 2
Ip Degree Of Protection	IP2X conforming to IEC 60529
Resistance To Incandescent Wire	750 °C conforming to IEC 60695-2-11
Shock Resistance	15 gn for 11 ms conforming to IEC 60068-2-27
Vibration Resistance	2 gn (f= 10…150 Hz) conforming to IEC 60068-2-6
Resistance To Electrostatic Discharge	4 kV (contact) level 3 conforming to IEC 61000-4-2 8 kV (air) level 3 conforming to IEC 61000-4-2
Resistance To Radiated Fields	10 V/m (26000000…1000000000 Hz) conforming to IEC 61000-4-3 level 3
Resistance To Fast Transients	2 kV level 3 conforming to IEC 61000-4-4
Ambient Air Temperature For Operation	-5…60 °C conforming to IEC 61131-2
Ambient Air Temperature For Storage	-40…80 °C conforming to IEC 61131-2
Pollution Degree	2 conforming to IEC 60664-1

Packing Units

Unit Type Of Package 1	PCE
Number Of Units In Package 1	1
Package 1 Height	7.0 cm
Package 1 Width	8.3 cm
Package 1 Length	21.1 cm
Package 1 Weight	446.0 g
Unit Type Of Package 2	S03
Number Of Units In Package 2	16
Package 2 Height	30.0 cm
Package 2 Width	30.0 cm
Package 2 Length	40.0 cm
Package 2 Weight	7.63 kg

Logistical informations

Country Of Origin	FR

Contractual warranty

Warranty	18 months

Sustainability

Green Premium™ label is Schneider Electric's commitment to delivering products with best-in-class environmental performance. Green Premium promises compliance with the latest regulations, transparency on environmental impacts, as well as circular and low-CO_2 products.

Guide to assessing product sustainability is a white paper that clarifies global eco-label standards and how to interpret environmental declarations.

Learn more about Green Premium >

Guide to assess a product's sustainability >

Transparency RoHS/REACh

Well-being performance

Mercury Free

Rohs Exemption Information	Yes

Certifications & Standards

Reach Regulation	REACh Declaration
Eu Rohs Directive	Pro-active compliance (Product out of EU RoHS legal scope)
China Rohs Regulation	China RoHS declaration
Environmental Disclosure	Product Environmental Profile
Weee	The product must be disposed on European Union markets following specific waste collection and never end up in rubbish bins
Circularity Profile	End of Life Information

Dimensions Drawings

Dimensions

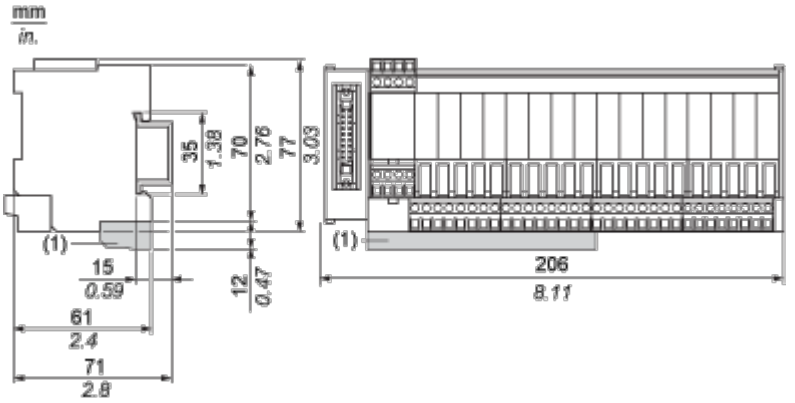

(1) ABE7BV20 / ABE7BV20E

Mounting and Clearance

Mounting

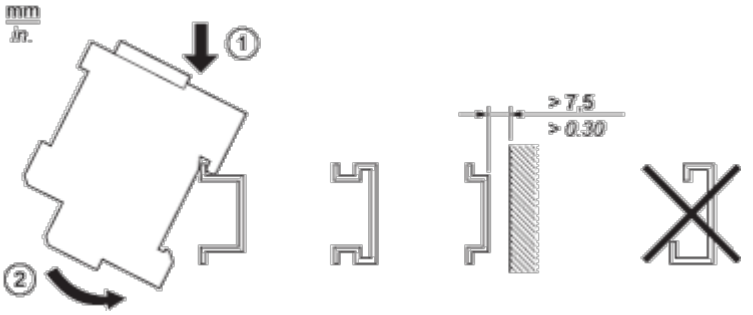

Connections and Schema

HE10 16 Channels

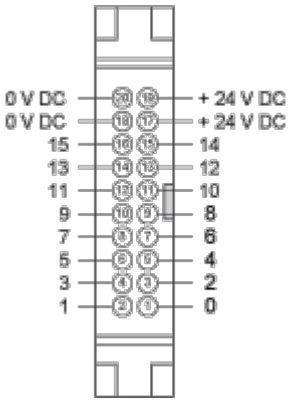

Wiring Diagram

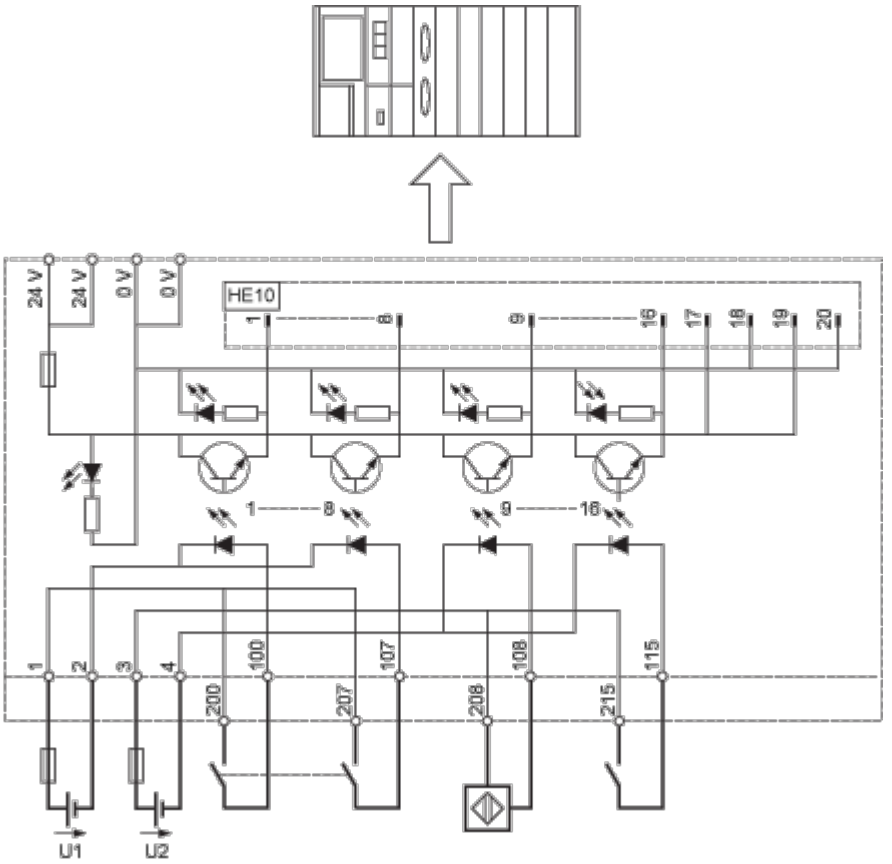

ABE7	U1, U2
S16E2B1 / E2B1E	24 VDC
S16E2E1 / E2E1E	48 VDC
S16E2E0 / E2E0E	48 VAC
S16E2F0 / E2F0E	115 VAC
S16E2M0 / E2M0E	230 VAC

Performance Curves

Curves for Determining Cable Type and Length According to the Current

16-channel Sub-base

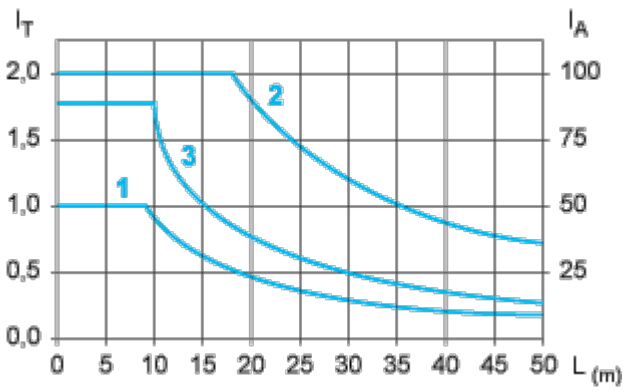

L Cable length

I_T Total current per sub base (A)

I_A Average current per channel (mA)

(1) TSXCDP••2 and ABFH20H••0 cables with c.s.a. 0.08 mm^2 (AWG 28).

(2) TSXCDP••3 cables with c.s.a. 0.34 mm^2 (AWG 22).

(3) Cables with c.s.a. 0.13 mm^2 (AWG 26).

The curves are given for a voltage drop of 1 V in the cable. For n volts tolerance, multiply the length determined from the graph by n.