Product datasheet

Specifications

Green Premium™

Sub-base with plug-in electromechanical relay ABE7 - 16 channels - relay 10 mm

ABE7R16T231

EAN Code: 3389110644692

Discontinued

Main

Range Of Product	Modicon ABE7
Product Or Component Type	Sub-base with plug-in electromechanical relay
Sub-Base Type	Output sub-base
[Us] Rated Supply Voltage	19...30 V conforming to IEC 61131-2
Number Of Channels	16

Complementary

Supply Voltage Type	DC
Product Compatibility	ABR7S23
Contacts Type And Composition	1 C/O
Status Led	1 LED per channel (green) channel status 1 LED (green) power ON
Polarity Distribution	Polarity distribution contact common per group of 8 channels
Short-Circuit Protection	1 A internal fuse, 5 x 20 mm, fast blow (PLC end) 0.5 A fuse per channel, 5 x 20 mm, fast blow (output circuit)
Fixing Mode	By clips (35 mm symmetrical DIN rail) By screws (solid plate with fixing kit)
Maximum Supply Current	1 A
Voltage Drop On Power Supply Fuse	0.3 V
[Ui] Rated Insulation Voltage	2000 V terminals/mounting rails 300 V coil circuit/contact circuits conforming to IEC 60947-1
[Uimp] Rated Impulse Withstand Voltage	2.5 kV
Installation Category	II conforming to IEC 60664-1
Tightening Torque	0.6 N.m with flat Ø 3.5 mm screwdriver
Net Weight	0.73 kg

Environment

Product Certifications	CSA UL GL DNV
Ip Degree Of Protection	IP2X conforming to IEC 60529
Resistance To Incandescent Wire	750 °C conforming to IEC 60695-2-11
Shock Resistance	15 gn for 11 ms conforming to IEC 60068-2-27

Disclaimer: This documentation is not intended as a substitute for and is not to be used for determining suitability or reliability of these products for specific user applications

Vibration Resistance	2 gn (f= 10…150 Hz) conforming to IEC 60068-2-6
Resistance To Electrostatic Discharge	4 kV (contact) level 3 conforming to IEC 61000-4-2 8 kV (air) level 3 conforming to IEC 61000-4-2
Resistance To Radiated Fields	10 V/m (26000000…1000000000 Hz) conforming to IEC 61000-4-3 level 3
Resistance To Fast Transients	2 kV level 3 conforming to IEC 61000-4-4
Ambient Air Temperature For Operation	-5…60 °C conforming to IEC 61131-2
Ambient Air Temperature For Storage	-40…80 °C conforming to IEC 61131-2
Pollution Degree	2 conforming to IEC 60664-1

Packing Units

Unit Type Of Package 1	PCE
Number Of Units In Package 1	1

Contractual warranty

Warranty	18 months

Sustainability

Green Premium™ label is Schneider Electric's commitment to delivering products with best-in-class environmental performance. Green Premium promises compliance with the latest regulations, transparency on environmental impacts, as well as circular and low-CO_2 products.

Guide to assessing product sustainability is a white paper that clarifies global eco-label standards and how to interpret environmental declarations.

Learn more about Green Premium >

Guide to assess a product's sustainability >

Transparency RoHS/REACh

Well-being performance

Mercury Free

Rohs Exemption Information	Yes

Certifications & Standards

Reach Regulation	REACh Declaration
Eu Rohs Directive	Pro-active compliance (Product out of EU RoHS legal scope)
China Rohs Regulation	China RoHS declaration
Environmental Disclosure	Product Environmental Profile
Weee	The product must be disposed on European Union markets following specific waste collection and never end up in rubbish bins
Circularity Profile	End of Life Information

Dimensions Drawings

Dimensions

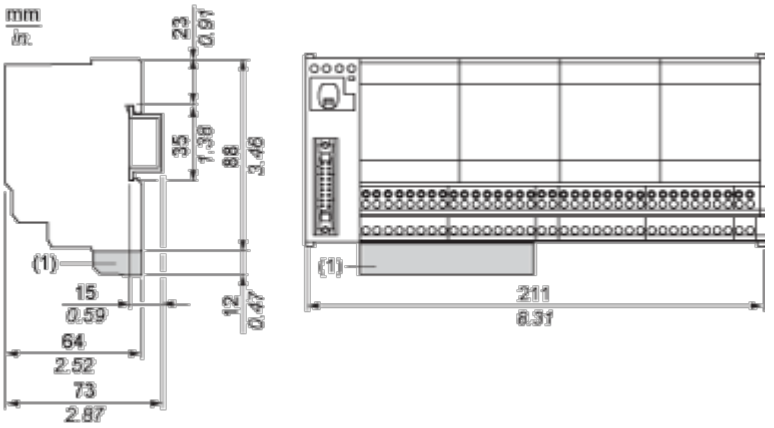

(1) ABE7BV10 / BV20, ABE7BV10E / BV20E

Mounting and Clearance

Mounting

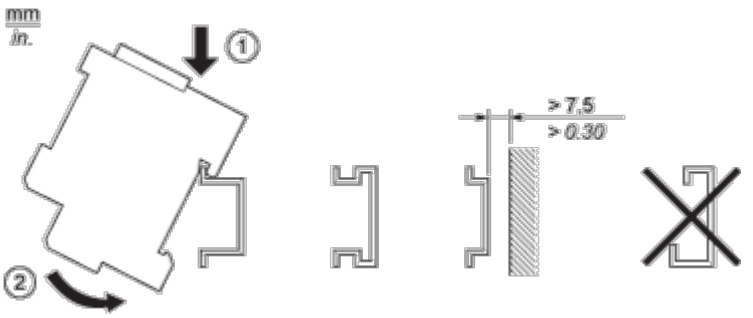

Connections and Schema

Wiring Diagram

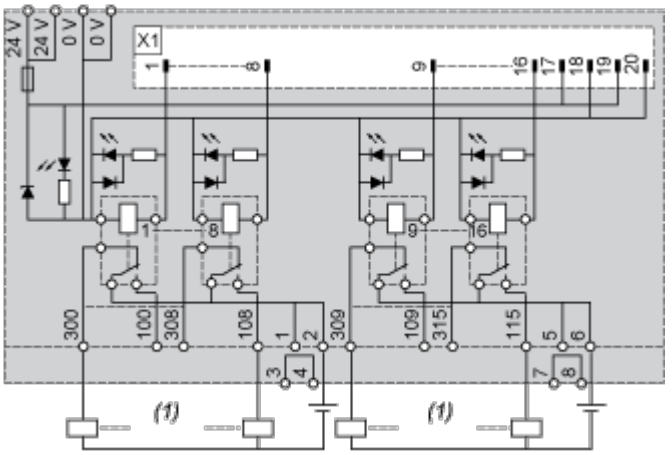

(1) 8 channels

Performance Curves

Curves for Determining Cable Type and Length According to the Current

16-channel Sub-base

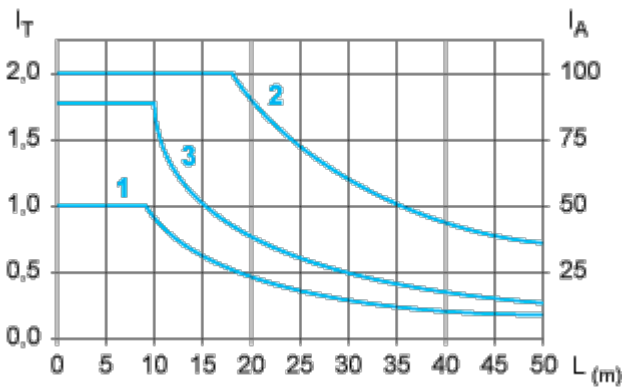

L Cable length

I_T Total current per sub base (A)

I_A Average current per channel (mA)

(1) TSXCDP••2 and ABFH20H••0 cables with c.s.a. 0.08 mm^2 (AWG 28).

(2) TSXCDP••3 cables with c.s.a. 0.34 mm^2 (AWG 22).

(3) Cables with c.s.a. 0.13 mm^2 (AWG 26).

The curves are given for a voltage drop of 1 V in the cable. For n volts tolerance, multiply the length determined from the graph by n.

Electrical Durability (in Millions of Operating Cycles) Conforming to IEC 60947-5-1

DC Loads

DC12 curves

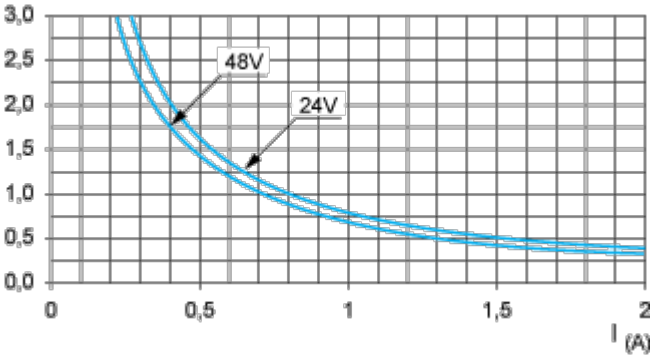

DC12 control of resistive loads and of solid state loads isolated by optocoupler, l/R ≤ 1 ms.

DC13 curves

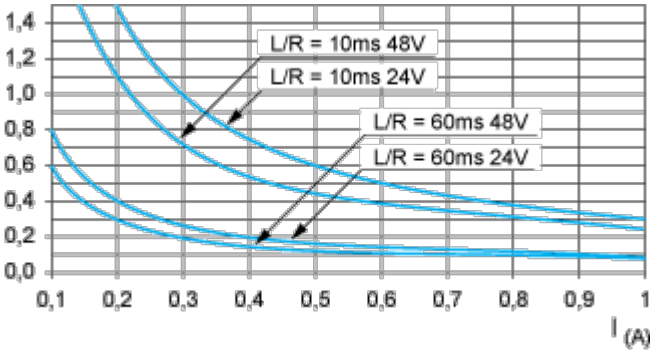

DC13 switching electromagnets, L/R ≤ 2 x (Ue x Ie) in ms, Ue: rated operational voltage, Ie: rated operational current (with a protective diode on the load, DC12 curves must be used with a coefficient of 0.9 applied to the number in millions of operating cycles)

AC Loads

AC12 curves

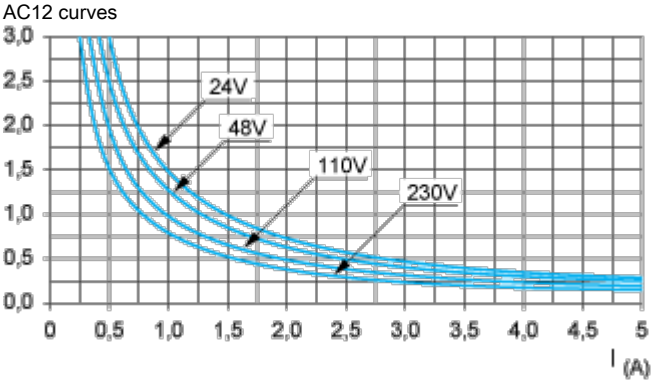

AC12 control of resistive loads and of solid state loads isolated by optocoupler, cos ϕ ≥ 0.9.

AC14 curves

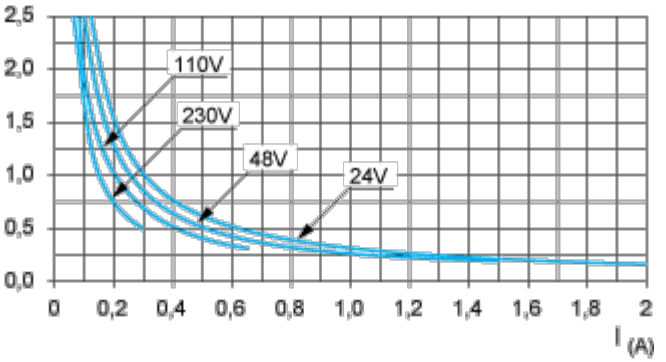

AC14 control of small electromagnetic loads ≤ 72 VA, make: cos ϕ = 0.3, break: cos ϕ = 0.3.

AC15 curves

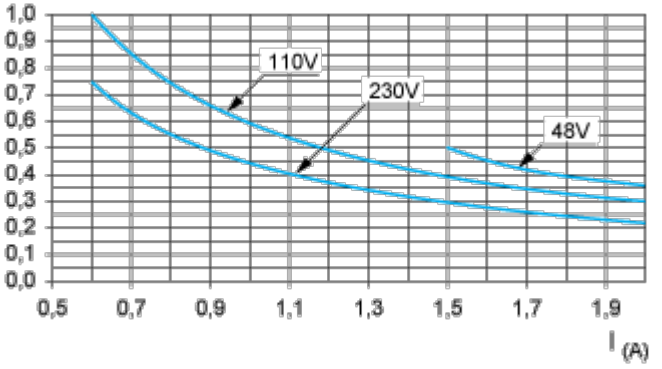

AC15 control of electromagnetic loads > 72 VA, make: cos ϕ = 0.7, break: cos ϕ = 0.4.