# Product datasheet

Specifications

Green Premium™

## sub-base - soldered electromechanical relays ABE7 - 16 channels - relay 5 mm

Local distributor code:

402703332 ABE7R16S111

**EAN Code: 3389110545272**

## Main

| | |
|---|---|
| **Range Of Product** | Modicon ABE7 |
| **Product Or Component Type** | Electromechanical output relay sub-base |
| **[Us] Rated Supply Voltage** | 24 V DC for PLC end |
| **Number Of Channels** | 16 |
| **Number Of Terminal Per Channel** | 1 |

## Complementary

| | |
|---|---|
| **Terminal Block Type** | Removable |
| **Polarity Distribution** | Polarity distribution contact common per group of 8 channels |
| **Fixing Mode** | By clips (35 mm symmetrical DIN rail)<br>By screws (solid plate with fixing kit) |
| **Maximum Current Per Output Common** | 12 A |
| **Current Per Channel** | 2 A for preactuator end |
| **Minimum Switching Current** | 1 mA at >= 5 V |
| **Drop-Out Voltage** | 2.4 V at 20 °C (PLC end) |
| **Switching Frequency** | <= 10 Hz<br><= 0.5 Hz |
| **Threshold Tripping Voltage** | 19.2 V at 40 °C |
| **Drop-Out Current** | 0.5 mA at 20 °C |
| **Maximum Power Dissipation Per Channel In W** | 0.22 W (PLC end) |
| **Contacts Type And Composition** | 1 NO for preactuator end |
| **Maximum Switching Voltage** | 250 V AC 50/60 Hz conforming to IEC 60947-5-1<br>30 V DC conforming to IEC 60947-5-1 |
| **Number Of Channel Per Common** | 8 |
| **Electrical Durability** | 500000 cycles, maximum switching current: 200 mA at 24 V DC-13 10 ms (preactuator end)<br>500000 cycles, maximum switching current: 400 mA at 230 V AC-15 (preactuator end)<br>500000 cycles, maximum switching current: 600 mA at 230 V AC-12 (preactuator end)<br>500000 cycles, maximum switching current: 600 mA at 24 V DC-12 (preactuator end) |
| **Electrical Reliability** | 1e-008 |
| **Operating Time** | <= 10 ms coil energisation and NO closing<br><= 6 ms coil de-energisation and NO opening |
| **Contact Bounce Time** | <= 5 ms 1 NO |

Disclaimer: This documentation is not intended as a substitute for and is not to be used for determining suitability or reliability of these products for specific user applications

| | |
|---|---|
| **Operating Rate In Hz** | 10 Hz no load<br>0.5 Hz at Ie |
| **Mechanical Durability** | 20000000 cycles |
| **[Uimp] Rated Impulse Withstand Voltage** | 2.5 kV conforming to IEC 60947-1 |
| **[Ui] Rated Insulation Voltage** | 2000 V |
| **Installation Category** | II conforming to IEC 60664-1 |
| **Tightening Torque** | 0.6 N.m with flat Ø 3.5 mm screwdriver |
| **Width** | 125 mm |
| **Height** | 77 mm |
| **Depth** | 58 mm |
| **Net Weight** | 0.405 kg |

## Environment

| | |
|---|---|
| **Max Immunity To Microbreaks** | 5 ms |
| **Dielectric Strength** | 2000 V conforming to IEC 60947-1 |
| **Product Certifications** | DNV<br>UL<br>CSA<br>GL<br>EAC |
| **Ip Degree Of Protection** | IP2X conforming to IEC 60529 |
| **Protective Treatment** | TC |
| **Resistance To Incandescent Wire** | 750 °C, extinction time <30 s conforming to IEC 60695-2-11 |
| **Shock Resistance** | 15 gn for 11 ms conforming to IEC 60068-2-27 |
| **Resistance To Radiated Fields** | 10 V/m (26000000…1000000000 Hz) conforming to IEC 61000-4-3 level 3 |
| **Resistance To Fast Transients** | 2 kV level 3 conforming to IEC 61000-4-4 |
| **Ambient Air Temperature For Operation** | -5…60 °C conforming to IEC 61131-2 |
| **Ambient Air Temperature For Storage** | -40…80 °C conforming to IEC 61131-2 |
| **Pollution Degree** | 2 conforming to IEC 60664-1 |

## Packing Units

| | |
|---|---|
| **Unit Type Of Package 1** | PCE |
| **Number Of Units In Package 1** | 1 |
| **Package 1 Height** | 7.0 cm |
| **Package 1 Width** | 8.2 cm |
| **Package 1 Length** | 13.6 cm |
| **Package 1 Weight** | 352.0 g |
| **Unit Type Of Package 2** | S03 |
| **Number Of Units In Package 2** | 30 |
| **Package 2 Height** | 30.0 cm |
| **Package 2 Width** | 30.0 cm |
| **Package 2 Length** | 40.0 cm |
| **Package 2 Weight** | 11.285 kg |

## Contractual warranty

| | |
|---|---|
| **Warranty** | 18 months |

## Sustainability

**Green Premium™ label** is Schneider Electric's commitment to delivering products with best-in-class environmental performance. Green Premium promises compliance with the latest regulations, transparency on environmental impacts, as well as circular and low-$CO_2$ products.

**Guide to assessing product sustainability** is a white paper that clarifies global eco-label standards and how to interpret environmental declarations.

Learn more about Green Premium >

Guide to assess a product's sustainability >

Transparency RoHS/REACh

## Well-being performance

Mercury Free

| | |
|---|---|
| Rohs Exemption Information | Yes |

## Certifications & Standards

| | |
|---|---|
| **Reach Regulation** | REACh Declaration |
| **Eu Rohs Directive** | Pro-active compliance (Product out of EU RoHS legal scope) |
| **China Rohs Regulation** | China RoHS declaration |
| **Environmental Disclosure** | Product Environmental Profile |
| **Weee** | The product must be disposed on European Union markets following specific waste collection and never end up in rubbish bins |
| **Circularity Profile** | End of Life Information |

## Dimensions Drawings

### Dimensions

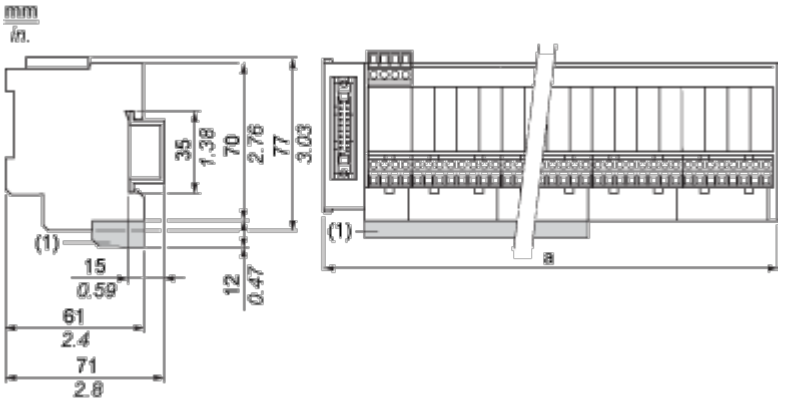


(1) ABE7BV20 / ABE7BV20E

| ABE7 | a in mm | a in in. |
|---|---|---|
| R16S111 / R16S111E | 125 | 4.92 |
| R16S21 / R16S21•E | 206 | 8.11 |

Mounting and Clearance

## Mounting

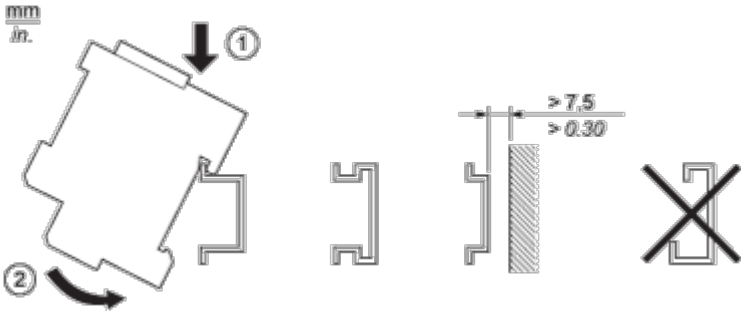

Connections and Schema

**HE10 16 Channels**

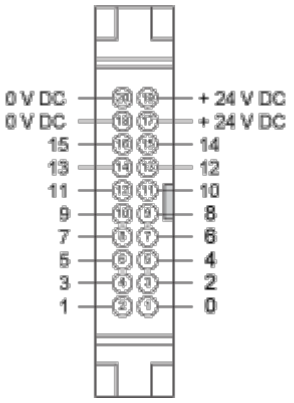

## Wiring Diagram

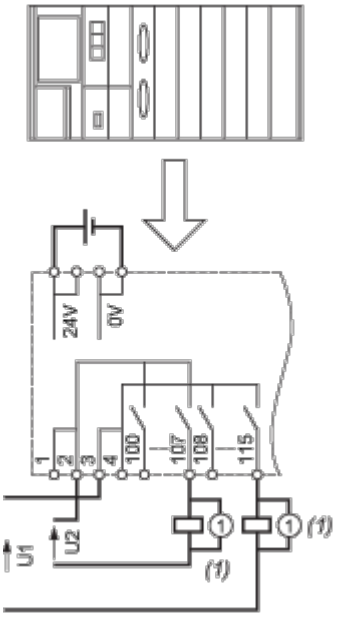


(1) Inductive load

## Performance Curves

### Curves for Determining Cable Type and Length According to the Current

**16-channel Sub-base**

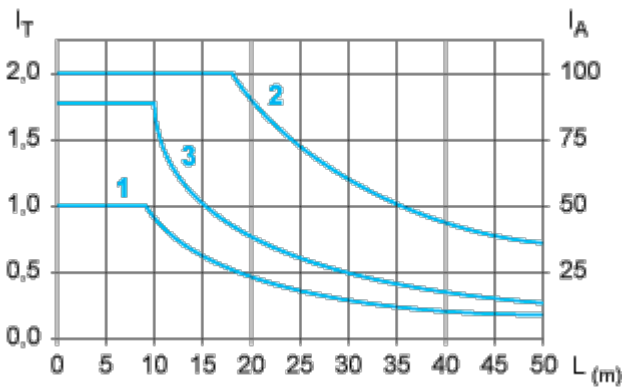


L Cable length

$I_T$ Total current per sub base (A)

$I_A$ Average current per channel (mA)

(1) TSXCDP••2 and ABFH20H••0 cables with c.s.a. 0.08 $mm^2$ (AWG 28).

(2) TSXCDP••3 cables with c.s.a. 0.34 $mm^2$ (AWG 22).

(3) Cables with c.s.a. 0.13 $mm^2$ (AWG 26).

The curves are given for a voltage drop of 1 V in the cable. For n volts tolerance, multiply the length determined from the graph by n.

## Temperature Derating Curves

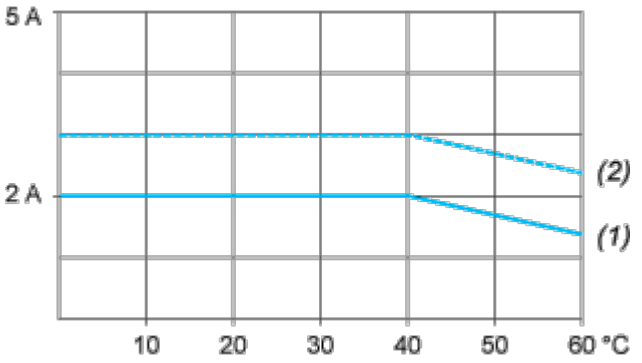


(1) 100 % of channels used

(2) 50 % of channels used

## Electrical Durability (in Millions of Operating Cycles) Conforming to IEC 60947-5-1

### DC Loads

DC12 curves

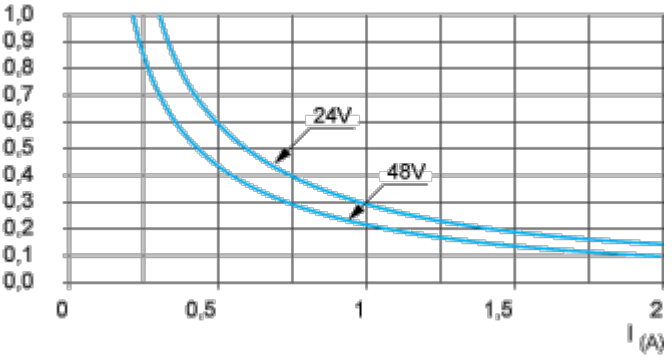


DC12 control of resistive loads and of solid state loads isolated by optocoupler, I/R ≤ 1 ms.

DC13 curves

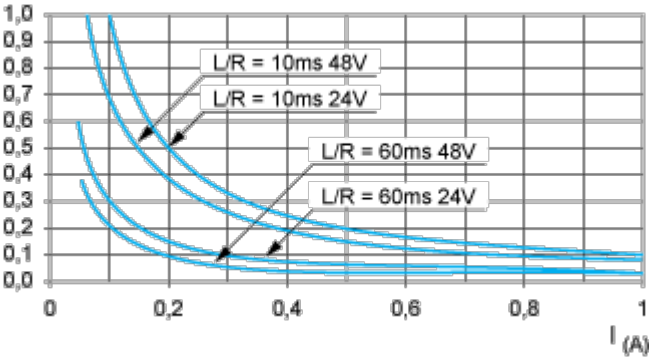


DC13 switching electromagnets, L/R ≤ 2 x (Ue x Ie) in ms, Ue: rated operational voltage, Ie: rated operational current (with a protective diode on the load, DC12 curves must be used with a coefficient of 0.9 applied to the number in millions of operating cycles)

### AC Loads

AC12 curves

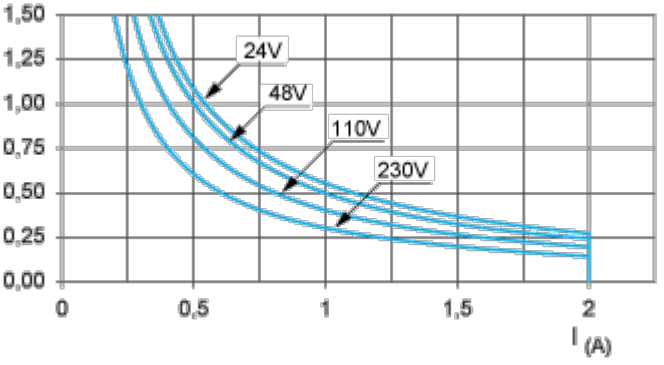


AC12 control of resistive loads and of solid state loads isolated by optocoupler, cos ϕ ≥ 0.9.

AC14 curves

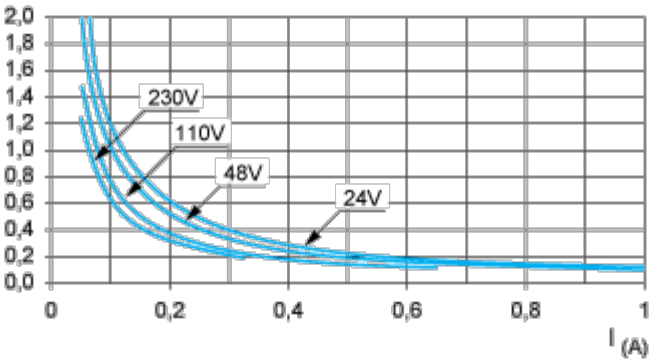


AC14 control of small electromagnetic loads ≤ 72 VA, make: cos ϕ = 0.3, break: cos ϕ = 0.3.

AC15 curves

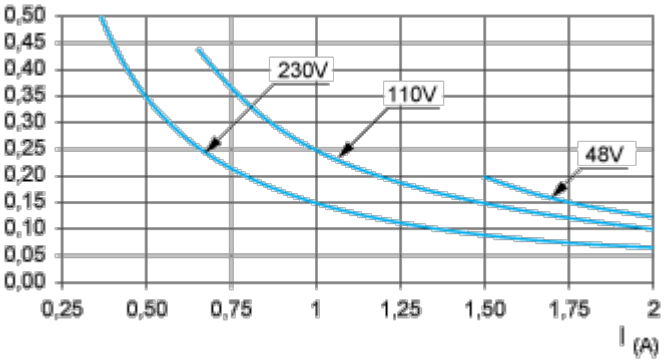


AC15 control of electromagnetic loads > 72 VA, make: cos ϕ = 0.7, break: cos ϕ = 0.4.