Product datasheet

Specifications

Green Premium™

sub-base for plug-in relay ABE7 - 16 channels - relay 10 mm

Local distributor code:

402703167 ABE7P16T210

EAN Code: 3389110644531

Main

Range Of Product	Modicon ABE7
Product Or Component Type	Sub-base for plug-in relay
Sub-Base Type	Output sub-base
[Us] Rated Supply Voltage	19...30 V conforming to IEC 61131-2
Number Of Channels	16
Connections - Terminals	Screw type terminals, 1 x 0.09...1 x 1.5 mm² (AWG 28...AWG 16) flexible with cable end Screw type terminals, 1 x 0.14...1 x 2.5 mm² (AWG 26...AWG 12) solid Screw type terminals, 1 x 0.14...1 x 2.5 mm² (AWG 26...AWG 14) flexible without cable end Screw type terminals, 2 x 0.09...2 x 0.75 mm² (AWG 28...AWG 20) flexible with cable end Screw type terminals, 2 x 0.2...2 x 2.5 mm² (AWG 24...AWG 14) solid

Complementary

Supply Voltage Type	DC
Product Compatibility	ABS7SC2. ABR7S2. ABS7SA2. ABE7ACC20
Status Led	1 LED per channel (green) channel status 1 LED (green) power ON
Polarity Distribution	Volt-free
Short-Circuit Protection	1 A internal fuse, 5 x 20 mm, fast blow (PLC end)
Fixing Mode	By clips (35 mm symmetrical DIN rail) By screws (solid plate with fixing kit)
Maximum Supply Current	1 A
Voltage Drop On Power Supply Fuse	0.3 V
Maximum Current Per Output Common	16 A
[Ui] Rated Insulation Voltage	300 V coil circuit/contact circuits conforming to IEC 60947-1 2000 V terminals/mounting rails
[Uimp] Rated Impulse Withstand Voltage	2.5 kV
Installation Category	II conforming to IEC 60664-1
Tightening Torque	0.6 N.m with flat Ø 3.5 mm screwdriver
Net Weight	0.615 kg

Environment

Disclaimer: This documentation is not intended as a substitute for and is not to be used for determining suitability or reliability of these products for specific user applications

Product Certifications	GL CSA UL DNV EAC
Ip Degree Of Protection	IP2X conforming to IEC 60529
Resistance To Incandescent Wire	750 °C conforming to IEC 60695-2-11
Shock Resistance	15 gn for 11 ms conforming to IEC 60068-2-27
Vibration Resistance	2 gn (f= 10…150 Hz) conforming to IEC 60068-2-6
Resistance To Electrostatic Discharge	4 kV (contact) level 3 conforming to IEC 61000-4-2 8 kV (air) level 3 conforming to IEC 61000-4-2
Resistance To Radiated Fields	10 V/m (26000000…1000000000 Hz) conforming to IEC 61000-4-3 level 3
Resistance To Fast Transients	2 kV level 3 conforming to IEC 61000-4-4
Ambient Air Temperature For Operation	-5…60 °C conforming to IEC 61131-2
Ambient Air Temperature For Storage	-40…80 °C conforming to IEC 61131-2
Pollution Degree	2 conforming to IEC 60664-1

Packing Units

Unit Type Of Package 1	PCE
Number Of Units In Package 1	1
Package 1 Height	8.0 cm
Package 1 Width	9.5 cm
Package 1 Length	22.0 cm
Package 1 Weight	592.0 g
Unit Type Of Package 2	S03
Number Of Units In Package 2	12
Package 2 Height	30.0 cm
Package 2 Width	30.0 cm
Package 2 Length	40.0 cm
Package 2 Weight	7.486 kg

Contractual warranty

Warranty	18 months

Sustainability

Green Premium™ label is Schneider Electric's commitment to delivering products with best-in-class environmental performance. Green Premium promises compliance with the latest regulations, transparency on environmental impacts, as well as circular and low-CO_2 products.

Guide to assessing product sustainability is a white paper that clarifies global eco-label standards and how to interpret environmental declarations.

Learn more about Green Premium >

Guide to assess a product's sustainability >

Transparency RoHS/REACh

Well-being performance

Mercury Free

Rohs Exemption Information	Yes

Certifications & Standards

Reach Regulation	REACh Declaration
Eu Rohs Directive	Pro-active compliance (Product out of EU RoHS legal scope)
China Rohs Regulation	China RoHS declaration
Environmental Disclosure	Product Environmental Profile
Weee	The product must be disposed on European Union markets following specific waste collection and never end up in rubbish bins
Circularity Profile	End of Life Information

Dimensions Drawings

Dimensions

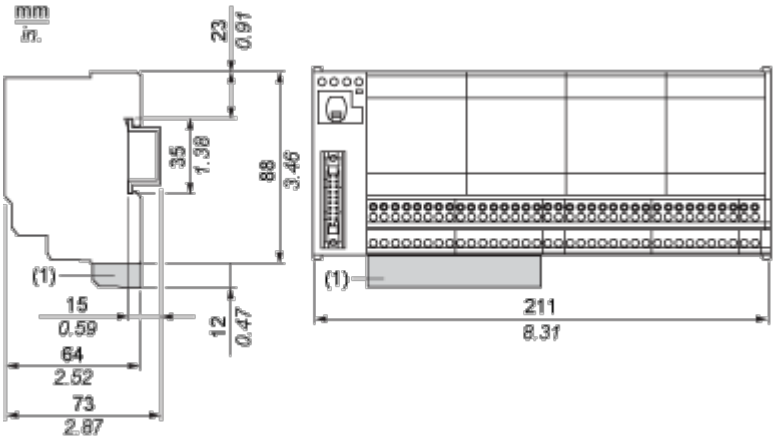

(1) ABE7BV10 / BV20, ABE7BV10E / BV20E

Mounting and Clearance

Mounting

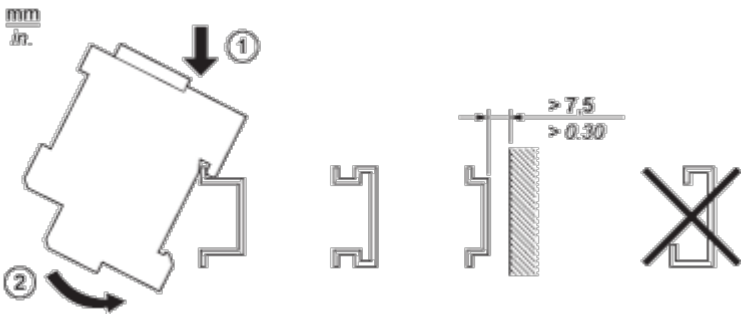

Connections and Schema

HE10 16 Channels

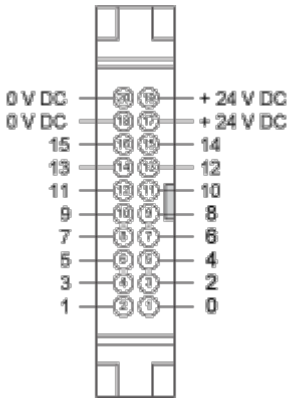

Wiring Diagram

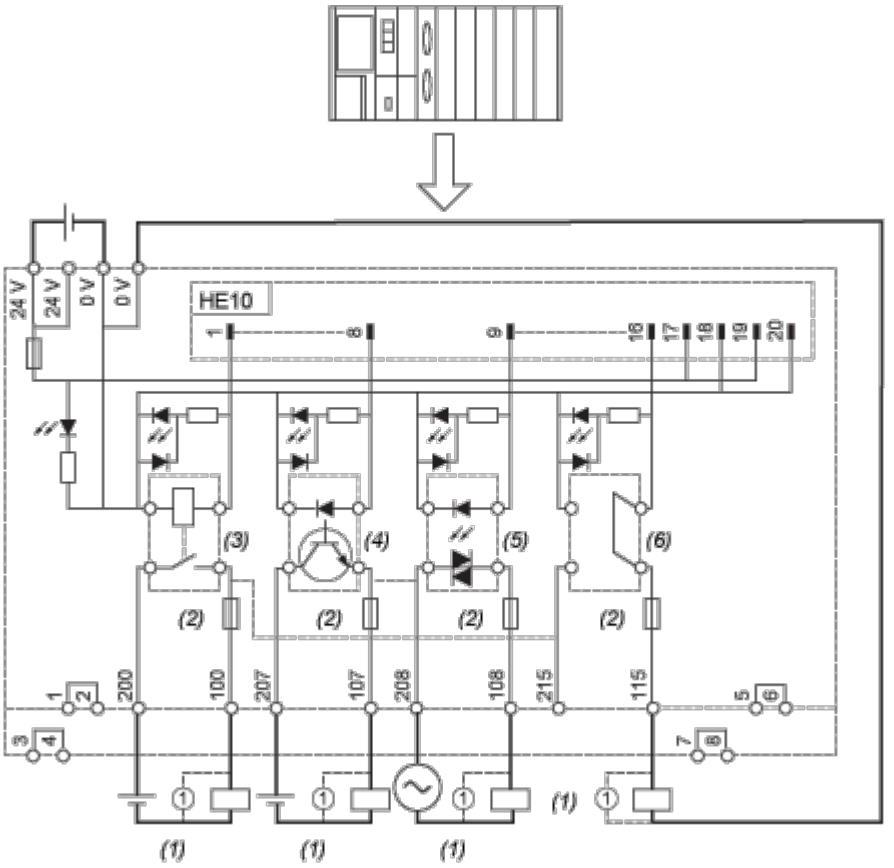

(1) Inductive load

(2) Fuse only for ABE7P16T214

(3) ABR7S21 (1 “F”/SPDT) (not supplied)

(4) ABS7SC2E (5...48 VDC) I max. = 0.5 A (not supplied)

(5) ABS7SA2M (24...240 VAC) I max. = 0.5 A (not supplied)

(6) ABE7ACC20 (24 VDC) (not supplied/not isolated)

Performance Curves

Curves for Determining Cable Type and Length According to the Current

16-channel Sub-base

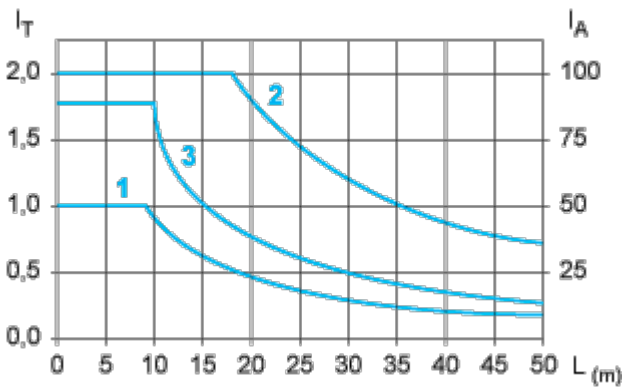

L Cable length

I_T Total current per sub base (A)

I_A Average current per channel (mA)

(1) TSXCDP••2 and ABFH20H••0 cables with c.s.a. 0.08 mm^2 (AWG 28).

(2) TSXCDP••3 cables with c.s.a. 0.34 mm^2 (AWG 22).

(3) Cables with c.s.a. 0.13 mm^2 (AWG 26).

The curves are given for a voltage drop of 1 V in the cable. For n volts tolerance, multiply the length determined from the graph by n.

Temperature Derating Curves

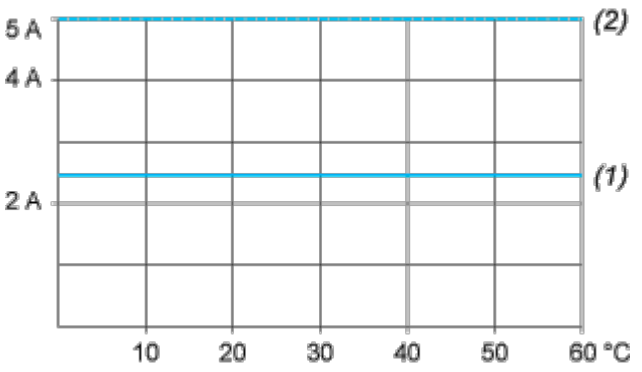

(1) 100 % of channels used

(2) 50 % of channels used