Product datasheet

Specifications

Green Premium™

passive connection sub-base ABE7 - 8 inputs or outputs - Led - isolator

ABE7H08S21

Discontinued

Discontinued on: 30 Jun 2017

End-of-service on: 15 Jan 2021

EAN Code: 3389110644470

Main

Range Of Product	Modicon ABE7
Product Or Component Type	Passive discrete I/O sub-base
Sub-Base Type	I/O sub-base
[Us] Rated Supply Voltage	19...30 V conforming to IEC 61131-2
Number Of Channels	8
Number Of Terminal Per Channel	2
Connections - Terminals	Screw type terminals, 1 x 0.09...1 x 1.5 mm² (AWG 28...AWG 16) flexible with cable end Screw type terminals, 1 x 0.14...1 x 2.5 mm² (AWG 26...AWG 12) solid Screw type terminals, 1 x 0.14...1 x 2.5 mm² (AWG 26...AWG 14) flexible without cable end Screw type terminals, 2 x 0.09...2 x 0.75 mm² (AWG 28...AWG 20) flexible with cable end Screw type terminals, 2 x 0.2...2 x 2.5 mm² (AWG 24...AWG 14) solid
Channel Additional Information	1 switch disconnector per channel

Complementary

Supply Voltage Type	DC
Number Of Horizontal Rows	2
Status Led	1 LED per channel (green) channel status 1 LED (green) power ON
Polarity Distribution	0 V or 24 V
Short-Circuit Protection	6.3 A internal fuse, 5 x 20 mm, fast blow (PLC end)
Connector Type	HE-10
Pin Number	20 pins
Fixing Mode	By clips (35 mm symmetrical DIN rail) By screws (solid plate with fixing kit)
Maximum Supply Current	4.1 A
Current Per Channel	0.5 A
Maximum Current Per Output Common	4.1 A
Voltage Drop On Power Supply Fuse	0.2 V
[Ui] Rated Insulation Voltage	2000 V
Installation Category	II conforming to IEC 60664-1

Disclaimer: This documentation is not intended as a substitute for and is not to be used for determining suitability or reliability of these products for specific user applications

Tightening Torque	0.6 N.m with flat Ø 3.5 mm screwdriver
Width	84 mm
Net Weight	0.245 kg

Environment

Product Certifications	CSA GL UL DNV
Ip Degree Of Protection	IP2X conforming to IEC 60529
Resistance To Incandescent Wire	750 °C conforming to IEC 60695-2-11
Shock Resistance	15 gn for 11 ms conforming to IEC 60068-2-27
Vibration Resistance	2 gn (f= 10…150 Hz) conforming to IEC 60068-2-6
Resistance To Electrostatic Discharge	4 kV (contact) level 3 conforming to IEC 61000-4-2 8 kV (air) level 3 conforming to IEC 61000-4-2
Resistance To Radiated Fields	10 V/m (26000000…1000000000 Hz) conforming to IEC 61000-4-3 level 3
Resistance To Fast Transients	2 kV level 3 conforming to IEC 61000-4-4
Ambient Air Temperature For Operation	-5…60 °C conforming to IEC 61131-2
Ambient Air Temperature For Storage	-40…80 °C conforming to IEC 61131-2
Pollution Degree	2 conforming to IEC 60664-1

Packing Units

Unit Type Of Package 1	PCE
Number Of Units In Package 1	1

Contractual warranty

Warranty	18 months

Sustainability

Green Premium™ label is Schneider Electric's commitment to delivering products with best-in-class environmental performance. Green Premium promises compliance with the latest regulations, transparency on environmental impacts, as well as circular and low-CO_2 products.

Guide to assessing product sustainability is a white paper that clarifies global eco-label standards and how to interpret environmental declarations.

Learn more about Green Premium >

Guide to assess a product's sustainability >

Transparency RoHS/REACh

Well-being performance

Mercury Free

Rohs Exemption Information	Yes

Certifications & Standards

Reach Regulation	REACh Declaration
Eu Rohs Directive	Pro-active compliance (Product out of EU RoHS legal scope)
China Rohs Regulation	China RoHS declaration
Environmental Disclosure	Product Environmental Profile
Weee	The product must be disposed on European Union markets following specific waste collection and never end up in rubbish bins
Circularity Profile	End of Life Information

Dimensions Drawings

Dimensions

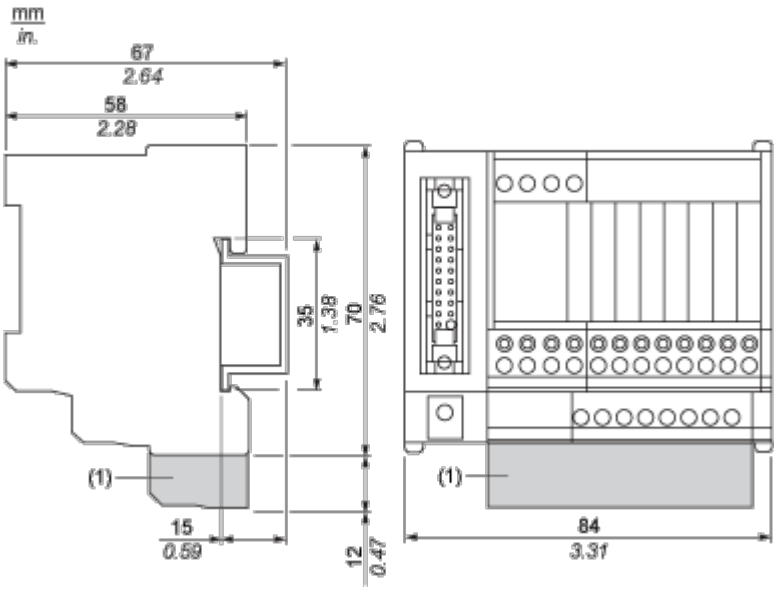

(1) ABE7BV10 / ABE7BV10E

Mounting and Clearance

Mounting

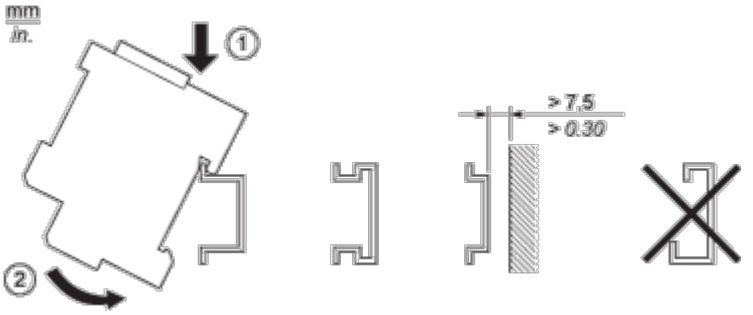

Connections and Schema

Wiring Diagram

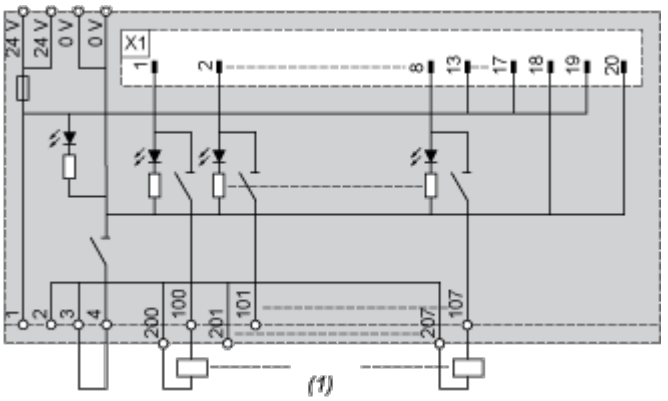

(1) 8 channels

Performance Curves

Curves for Determining Cable Type and Length According to the Current

8-channel Sub-base

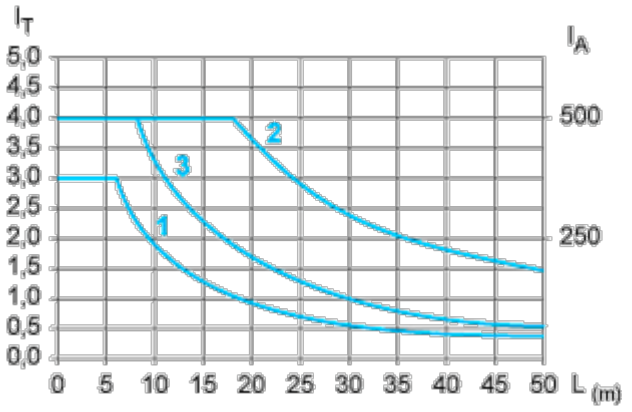

L Cable length

I_T Total current per sub base (A)

I_A Average current per channel (mA)

(1) TSXCDP••2 and ABFH20H••0 cables with c.s.a. 0.08 mm^2 (AWG 28).

(2) TSXCDP••3 cables with c.s.a. 0.34 mm^2 (AWG 22).

(3) Cables with c.s.a. 0.13 mm^2 (AWG 26).

The curves are given for a voltage drop of 1 V in the cable. For n volts tolerance, multiply the length determined from the graph by n.