# Product datasheet

Specifications

Green Premium™

## PUSHBUTTON 30MM 110-120V 50-60HZ K

Local distributor code:

387211091 9001KR9P38RH25

**EAN Code: 3389110915105**

## Main

| | |
|---|---|
| **Range Of Product** | Harmony 9001K |
| **Product Or Component Type** | Illuminated push-button |
| **Device Short Name** | 9001K |
| **Type Of Operator** | push-pull |
| **Operator Profile** | Red mushroom Ø 41 mm, unmarked |
| **Light Block Supply** | Direct |

## Complementary

| | |
|---|---|
| **Bezel Material** | Metal |
| **Mounting Diameter** | 30 mm |
| **Cad Overall Width** | 54 mm |
| **Cad Overall Height** | 42 mm |
| **Cad Overall Depth** | 103 mm |
| **Terminals Description Iso N°1** | (11-12)NC_OL<br>(21-22)NC |
| **Net Weight** | 0.168 kg |
| **Operating Position** | Any position |
| **Shape Of Signaling Unit Head** | Round |
| **Operator Position Information** | 2 positions |
| **Contacts Type And Composition** | 1 NC late break + 1 NC |
| **Contacts Type And Composition** | 1 NC for late-break<br>1 NC for slow-break |
| **Positive Opening** | With conforming to IEC 60947-5-2 |
| **Mechanical Durability** | 5000000 cycles |
| **Connections - Terminals** | Screw clamp terminals, 1 x 0.22...2 x 1.5 mm² conforming to IEC 60947-1 |
| **Tightening Torque** | 0.8 N.m conforming to IEC 60947-1 |
| **Shape Of Screw Head** | Cross slotted |
| **Contacts Material** | Silver alloy contacts |
| **Short-Circuit Protection** | 10 A cartridge fuse conforming to IEC 60947-5-1 |
| **[Ith] Conventional Free Air Thermal Current** | 10 A |
| **[Ui] Rated Insulation Voltage** | 250 V (pollution degree 3) conforming to IEC 60947-1 |
| **[Uimp] Rated Impulse Withstand Voltage** | 2.5 kV conforming to IEC 60947-1 |

Disclaimer: This documentation is not intended as a substitute for and is not to be used for determining suitability or reliability of these products for specific user applications

| | |
|---|---|
| **[Ie] Rated Operational Current** | 0.55 A at 125 V, DC-13, A600-Q600 conforming to NEMA |
| **[Icm] Rated Short-Circuit Making Capacity** | 12 kA at 600 V AC-15, 7200 VA<br>15 kA at 480 V AC-15, 7200 VA<br>30 kA at 240 V AC-15, 7200 VA<br>60 kA at 120 V AC-15, 7200 VA |
| **Rated Breaking Capacity** | 1.2 kA at 600 V AC-15, 720 VA<br>1.5 kA at 480 V AC-15, 720 VA<br>3 kA at 240 V AC-15, 720 VA<br>6 kA at 120 V AC-15, 720 VA<br>0.1 kA at 600 V DC-13<br>0.27 kA at 250 V DC-13<br>0.55 kA at 125 V DC-13 |
| **Light Source** | incandescent |
| **Bulb Base** | BA 9s |
| **[Us] Rated Supply Voltage** | 120 V AC/DC |
| **Operator Additional Information** | Screw-on plastic |
| **Device Presentation** | Complete product |
| **Cap/Operator Or Lens Colour** | Red |
| **[Us] Rated Supply Voltage** | 120 V |
| **Light Block Supply** | Full voltage or resistor |
| **Operator Profile** | Mushroom Ø 41 mm |
| **Type Of Operator** | Push-pull |
| **Size** | 30 mm |
| **Light Source** | Incandescent bulb |

## Environment

| | |
|---|---|
| **Protective Treatment** | TC |
| **Ambient Air Temperature For Storage** | -40…70 °C |
| **Ambient Air Temperature For Operation** | -25…70 °C |
| **Electrical Shock Protection Class** | Class II conforming to IEC 61140 |
| **Ip Degree Of Protection** | IP66 conforming to IEC 60529 |
| **Nema Degree Of Protection** | NEMA 1<br>NEMA 12<br>NEMA 13<br>NEMA 2<br>NEMA 3<br>NEMA 3R<br>NEMA 4 |
| **Standards** | EN/IEC 60947-5-1<br>JIS C 4520<br>CSA C22.2 No 14<br>EN/IEC 60947-5-4<br>UL 508<br>EN/IEC 60947-1<br>JIS C 852 |
| **Product Certifications** | NEMA<br>UL 508 |
| **Vibration Resistance** | 7 gn (f= 2…500 Hz) conforming to IEC 60068-2-6 |
| **Shock Resistance** | 50 gn conforming to IEC 60068-2-27 |

## Packing Units

| | |
|---|---|
| **Unit Type Of Package 1** | PCE |

| | |
|---|---|
| **Number Of Units In Package 1** | 1 |
| **Package 1 Height** | 5.001 cm |
| **Package 1 Width** | 11.3 cm |
| **Package 1 Length** | 5.799 cm |
| **Package 1 Weight** | 226.796 g |

## Contractual warranty

| | |
|---|---|
| **Warranty** | 18 months |

## Sustainability

**Green Premium™ label** is Schneider Electric's commitment to delivering products with best-in-class environmental performance. Green Premium promises compliance with the latest regulations, transparency on environmental impacts, as well as circular and low-$CO_2$ products.

**Guide to assessing product sustainability** is a white paper that clarifies global eco-label standards and how to interpret environmental declarations.

Learn more about Green Premium >

Guide to assess a product's sustainability >

Transparency RoHS/REACh

## Well-being performance

Mercury Free

| | |
|---|---|
| Rohs Exemption Information | Yes |

## Certifications & Standards

| | |
|---|---|
| **Reach Regulation** | REACh Declaration |
| **Eu Rohs Directive** | Pro-active compliance (Product out of EU RoHS legal scope) |
| **China Rohs Regulation** | China RoHS declaration |
| **Environmental Disclosure** | Product Environmental Profile |
| **Weee** | The product must be disposed on European Union markets following specific waste collection and never end up in rubbish bins |
| **Circularity Profile** | No need of specific recycling operations |

## Dimensions Drawings

### Dimensions

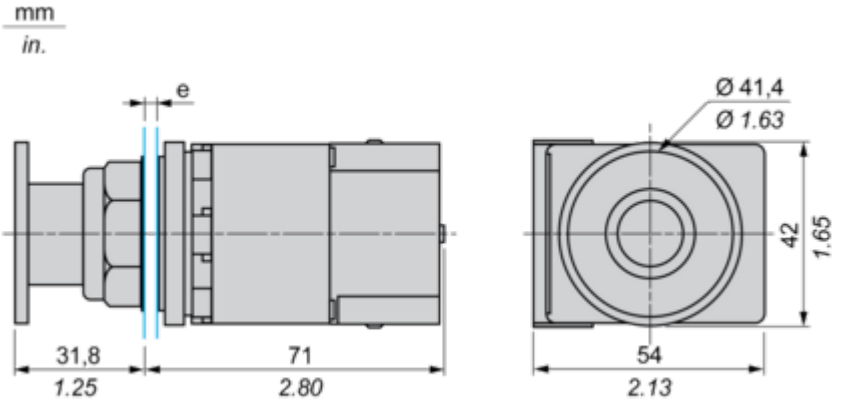


**e** panel thickness: 1 to 6 mm / 0.04 to 0.24 in.

## Mounting and Clearance

### Contact Block Mounting Position

Top and Rear views

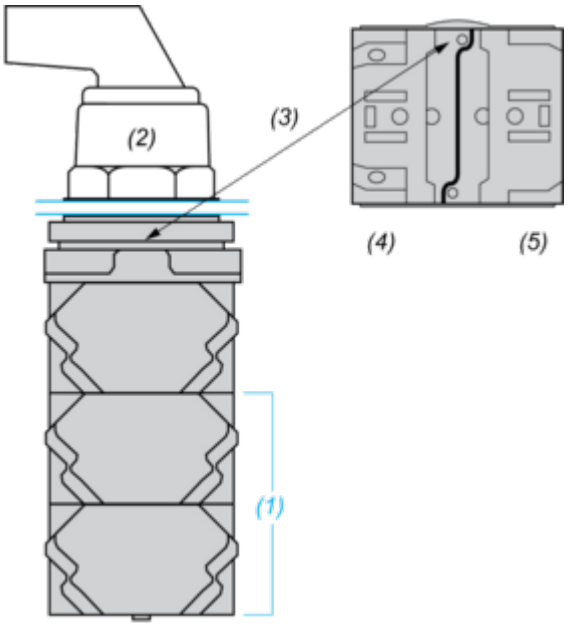


**(1)** It is possible to mount up to 3 levels of contacts blocks (maximum of 6 contacts blocks)
**(2)** Operator
**(3)** Locating notch
**(4)** Side 1
**(5)** Side 2

## Panel Cut-Out

### Clearance

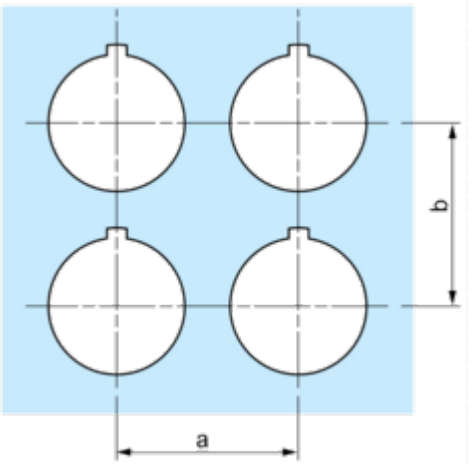


| Legend plate | a min. | | b min. | |
|---|---|---|---|---|
| | mm | in. | mm | in. |
| 9001KN2•• | 57.2 | 2.25 | 44.5 | 1.75 |
| 9001KN3•• | 57.2 | 2.25 | 50.8 | 2.00 |

### Individual Cut-outs Details
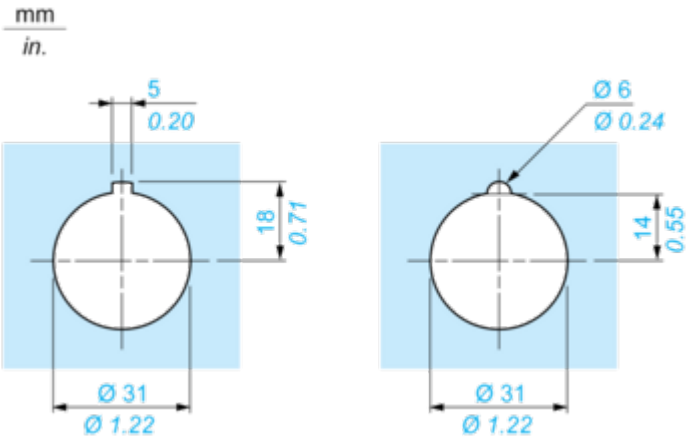
2 alternatives