# Product datasheet

Specifications

## PUSH BUTTON 600VAC 10A 30MM T-K

Local distributor code:

387206475 9001KR1GH13

**EAN Code: 3389110910742**

## Main

| | |
|---|---|
| **Range Of Product** | Harmony 9001K |
| **Product Or Component Type** | Push-button |
| **Device Short Name** | 9001K |
| **Type Of Operator** | spring return |
| **Operator Profile** | Green flush, unmarked |
| **Operator Additional Information** | Metal guard |

## Complementary

| | |
|---|---|
| **Bezel Material** | Metal |
| **Mounting Diameter** | 30 mm |
| **Shape Of Signaling Unit Head** | Octagonal |
| **Contacts Type And Composition** | 1 C/O |
| **Connections - Terminals** | Screw clamp terminals 1 x 0.22...2 x 1.5 mm² conforming to IEC 60947-1 |
| **Tightening Torque** | 0.8 N.m conforming to IEC 60947-1 |
| **Shape Of Screw Head** | Cross slotted |
| **Mechanical Durability** | 5000000 cycles |
| **Operating Position** | Any position |
| **[Ie] Rated Operational Current** | 3 A at 240 V, AC-15, A600-Q600 conforming to NEMA<br>0.55 A at 125 V, DC-13, A600-Q600 conforming to NEMA |
| **[Ui] Rated Insulation Voltage** | 250 V (pollution degree 3) conforming to IEC 60947-1 |
| **[Uimp] Rated Impulse Withstand Voltage** | 2.5 kV conforming to IEC 60947-1 |
| **Contacts Material** | Silver alloy contacts |
| **Contact Operation** | Standard |
| **Positive Opening** | Without |
| **Short-Circuit Protection** | 10 A cartridge fuse conforming to IEC 60947-5-1 |
| **[Ith] Conventional Free Air Thermal Current** | 10 A |
| **[Icm] Rated Short-Circuit Making Capacity** | 12 kA at 600 V AC-15, 7200 VA<br>15 kA at 480 V AC-15, 7200 VA<br>30 kA at 240 V AC-15, 7200 VA<br>60 kA at 120 V AC-15, 7200 VA<br>0.1 kA at 600 V DC-13<br>0.27 kA at 250 V DC-13<br>0.55 kA at 125 V DC-13 |

Disclaimer: This documentation is not intended as a substitute for and is not to be used for determining suitability or reliability of these products for specific user applications

| | |
|---|---|
| **Rated Breaking Capacity** | 3 kA at 240 V AC-15, 720 VA<br>6 kA at 120 V AC-15, 720 VA<br>1.2 kA at 600 V AC-15, 720 VA<br>1.5 kA at 480 V AC-15, 720 VA<br>0.1 kA at 600 V DC-13<br>0.27 kA at 250 V DC-13<br>0.55 kA at 125 V DC-13 |
| **Terminals Description Iso N°1** | (13-14-11-12)OF |
| **Cad Overall Width** | 48 mm |
| **Cad Overall Height** | 45 mm |
| **Cad Overall Depth** | 56 mm |
| **Net Weight** | 0.121 kg |
| **Device Presentation** | Complete product |
| **Cap/Operator Or Lens Colour** | Green |
| **Operator Profile** | Flush |
| **Type Of Operator** | Spring return |
| **Size** | 30 mm |

## Environment

| | |
|---|---|
| **Standards** | IEC 60947-1<br>JIS C 4520<br>IEC 60947-5-1<br>CSA C22.2 No 14<br>JIS C 852<br>IEC 60947-5-4 |
| **Product Certifications** | UL 508<br>NEMA |
| **Protective Treatment** | TC |
| **Ambient Air Temperature For Storage** | -40…70 °C |
| **Ambient Air Temperature For Operation** | -25…70 °C |
| **Vibration Resistance** | 7 gn (f= 2…500 Hz) conforming to IEC 60068-2-6 |
| **Shock Resistance** | 50 gn conforming to IEC 60068-2-27 |
| **Electrical Shock Protection Class** | Class II conforming to IEC 61140 |
| **Ip Degree Of Protection** | IP66 conforming to IEC 60529 |
| **Nema Degree Of Protection** | NEMA 1<br>NEMA 12<br>NEMA 13<br>NEMA 2<br>NEMA 3<br>NEMA 3R<br>NEMA 4 |

## Packing Units

| | |
|---|---|
| **Unit Type Of Package 1** | PCE |
| **Number Of Units In Package 1** | 1 |
| **Package 1 Height** | 5.5 cm |
| **Package 1 Width** | 9.4 cm |
| **Package 1 Length** | 4.6 cm |
| **Package 1 Weight** | 130.0 g |
| **Unit Type Of Package 2** | S01 |

| | |
|---|---|
| **Number Of Units In Package 2** | 24 |
| **Package 2 Height** | 15.0 cm |
| **Package 2 Width** | 15.0 cm |
| **Package 2 Length** | 40.0 cm |
| **Package 2 Weight** | 3.12 kg |

## Contractual warranty

| | |
|---|---|
| **Warranty** | 18 months |

## Sustainability

**Green Premium™ label** is Schneider Electric's commitment to delivering products with best-in-class environmental performance. Green Premium promises compliance with the latest regulations, transparency on environmental impacts, as well as circular and low-$CO_2$ products.

**Guide to assessing product sustainability** is a white paper that clarifies global eco-label standards and how to interpret environmental declarations.

Learn more about Green Premium >

Guide to assess a product's sustainability >

Transparency RoHS/REACh

## Well-being performance

Mercury Free

| | |
|---|---|
| Rohs Exemption Information | Yes |

## Certifications & Standards

| | |
|---|---|
| **Reach Regulation** | REACh Declaration |
| **Eu Rohs Directive** | Pro-active compliance (Product out of EU RoHS legal scope) |
| **China Rohs Regulation** | China RoHS declaration |
| **Environmental Disclosure** | Product Environmental Profile |
| **Weee** | The product must be disposed on European Union markets following specific waste collection and never end up in rubbish bins |
| **Circularity Profile** | No need of specific recycling operations |

## Dimensions Drawings

### Dimensions

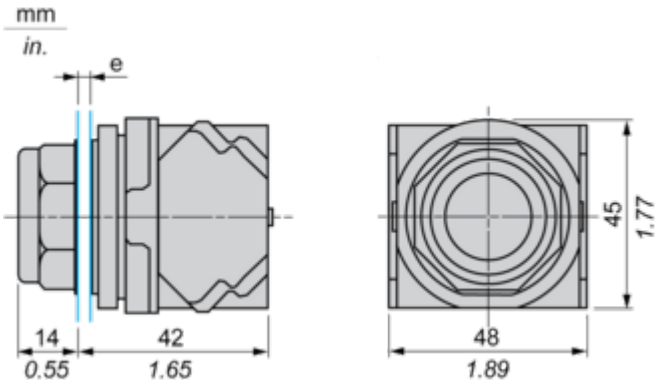


**e** panel thickness: 1 to 6 mm / 0.04 to 0.24 in.

## Mounting and Clearance

### Contact Block Mounting Position

Top and Rear views

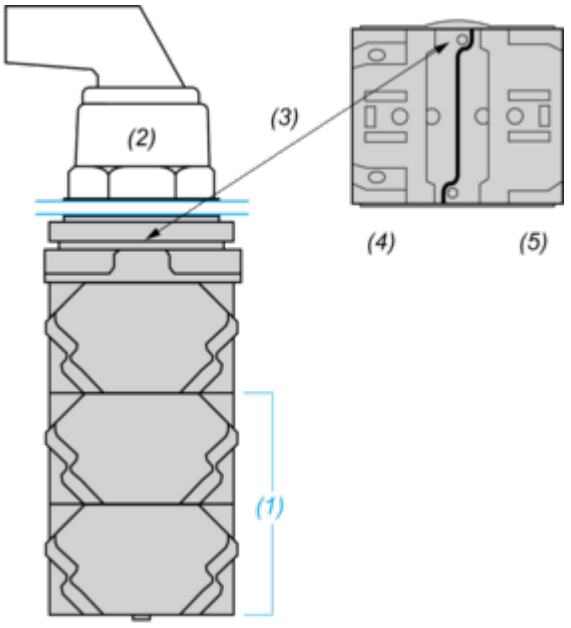


**(1)** It is possible to mount up to 3 levels of contacts blocks (maximum of 6 contacts blocks)
**(2)** Operator
**(3)** Locating notch
**(4)** Side 1
**(5)** Side 2

## Panel Cut-Out

### Clearance

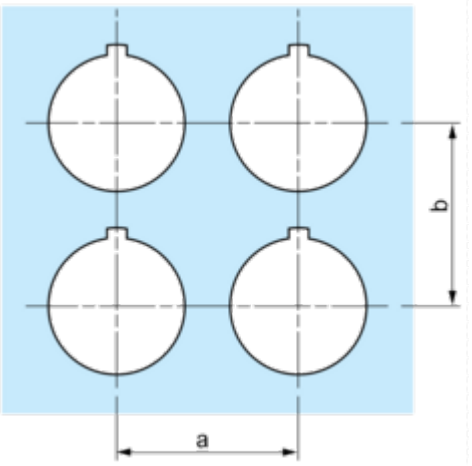


| Legend plate | a min. | | b min. | |
|---|---|---|---|---|
| | mm | in. | mm | in. |
| 9001KN2•• | 57.2 | 2.25 | 44.5 | 1.75 |
| 9001KN3•• | 57.2 | 2.25 | 50.8 | 2.00 |

### Individual Cut-outs Details
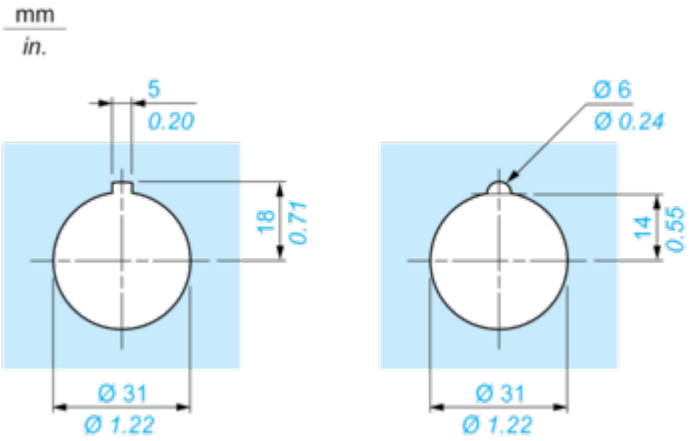
2 alternatives