Product datasheet

Specifications

Green Premium™

30mm TTR Mushroom, 2 C/O

Local distributor code:

395509410 9001KR16H2

Main

Range Of Product	Harmony 9001K
Product Or Component Type	Emergency stop push-button
Device Short Name	9001K
Type Of Operator	Turn to release trigger action
Operator Profile	Red mushroom Ø 40 mm, unmarked

Complementary

Bezel Material	Metal
Mounting Diameter	30 mm
Cad Overall Width	40 mm
Cad Overall Height	40 mm
Cad Overall Depth	116 mm
Net Weight	0.141 kg
Operating Position	Any position
Shape Of Signaling Unit Head	Round
Head Material	Plastic
Operator Position Information	2 positions
Contacts Type And Composition	2 C/O
Mechanical Durability	5000000 cycles
Connections - Terminals	Screw clamp terminals, 1 x 0.22...2 x 1.5 mm² conforming to IEC 60947-1
Tightening Torque	0.8 N.m conforming to IEC 60947-1
Shape Of Screw Head	Cross slotted
Contacts Material	Silver alloy contacts
Short-Circuit Protection	10 A cartridge fuse conforming to IEC 60947-5-1
[Ith] Conventional Free Air Thermal Current	10 A
[Ui] Rated Insulation Voltage	250 V (pollution degree 3) conforming to IEC 60947-1
[Uimp] Rated Impulse Withstand Voltage	2.5 kV conforming to IEC 60947-1
[Ie] Rated Operational Current	3 A at 240 V, AC-15, A600-Q600 conforming to NEMA 0.55 A at 125 V, DC-13, A600-Q600 conforming to NEMA
[Icm] Rated Short-Circuit Making Capacity	12 kA at 120 V AC-15, 7200 VA 0.1 kA at 600 V DC-13 0.27 kA at 250 V DC-13 0.55 kA at 125 V DC-13

Disclaimer: This documentation is not intended as a substitute for and is not to be used for determining suitability or reliability of these products for specific user applications

Rated Breaking Capacity	3 kA at 240 V AC-15, 720 VA 6 kA at 120 V AC-15, 720 VA 1.2 kA at 600 V AC-15, 720 VA 1.5 kA at 480 V AC-15, 720 VA 0.1 kA at 600 V DC-13 0.27 kA at 250 V DC-13 0.55 kA at 125 V DC-13
Device Presentation	Complete product
Cap/Operator Or Lens Colour	Red
Operator Profile	Mushroom Ø 40 mm
Type Of Operator	Turn to release
Size	30 mm

Environment

Protective Treatment	TC
Ambient Air Temperature For Storage	-40…70 °C
Ambient Air Temperature For Operation	-25…70 °C
Overvoltage Category	Class II conforming to IEC 61140
Ip Degree Of Protection	IP66 conforming to IEC 60529
Nema Degree Of Protection	NEMA 1 NEMA 12 NEMA 13 NEMA 2 NEMA 3 NEMA 3R NEMA 4 NEMA 6
Standards	IEC 60204-1, for emergency stop devices if used with emergency stop legend plate type 9001KN ISO 13850, for emergency stop devices if used with emergency stop legend plate type 9001KN IEC 60947-5-1 IEC 60947-1 IEC 60947-5-4 IEC 60947-5-5 JIS C 4520 JIS C 852 UL 60947-5-5 CSA C22.2 No 14
Product Certifications	NEMA UL 508
Vibration Resistance	7 gn (f= 2…500 Hz) conforming to IEC 60068-2-6
Shock Resistance	50 gn conforming to IEC 60068-2-27

Packing Units

Unit Type Of Package 1	PCE
Number Of Units In Package 1	1
Package 1 Height	5.1 cm
Package 1 Width	6.1 cm
Package 1 Length	11.4 cm
Package 1 Weight	226.8 g

Contractual warranty

Warranty	18 months

Sustainability

Green Premium™ label is Schneider Electric's commitment to delivering products with best-in-class environmental performance. Green Premium promises compliance with the latest regulations, transparency on environmental impacts, as well as circular and low-CO_2 products.

Guide to assessing product sustainability is a white paper that clarifies global eco-label standards and how to interpret environmental declarations.

Learn more about Green Premium >

Guide to assess a product's sustainability >

Transparency RoHS/REACh

Well-being performance

Mercury Free

Rohs Exemption Information	Yes

Certifications & Standards

Reach Regulation	REACh Declaration
Eu Rohs Directive	Pro-active compliance (Product out of EU RoHS legal scope)
China Rohs Regulation	China RoHS declaration
Environmental Disclosure	Product Environmental Profile
Weee	The product must be disposed on European Union markets following specific waste collection and never end up in rubbish bins
Circularity Profile	No need of specific recycling operations

Dimensions Drawings

Dimensions

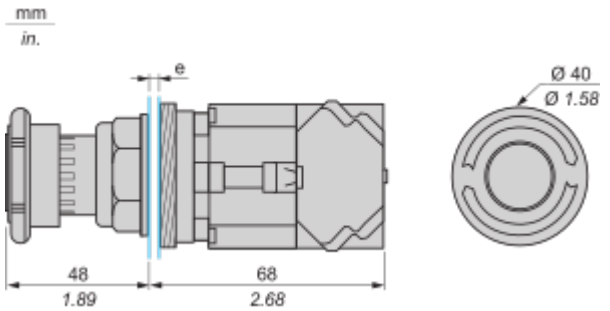

e : panel thickness 1 to 6 mm / 0.04 to 0.24 in.

Mounting and Clearance

Contact Block Mounting Position

Top and Rear views

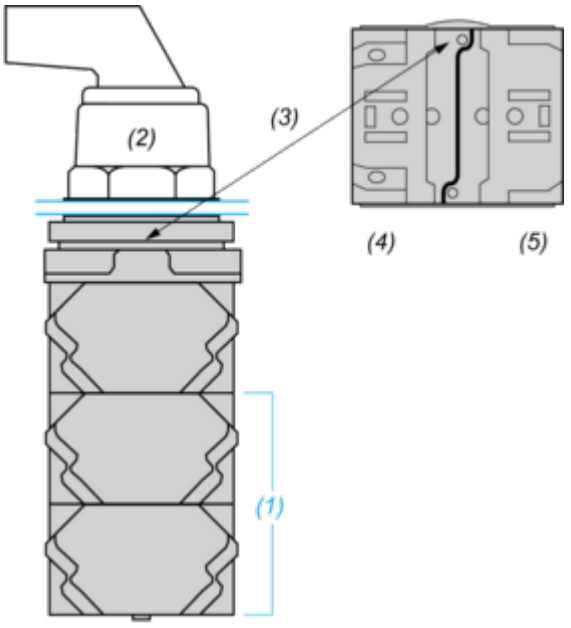

(1) It is possible to mount up to 3 levels of contacts blocks (maximum of 6 contacts blocks)
(2) Operator
(3) Locating notch
(4) Side 1
(5) Side 2

Panel Cut-Out

Clearance

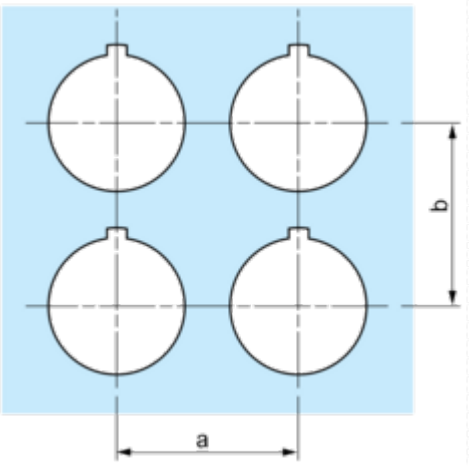

Legend plate	a min.		b min.	
	mm	in.	mm	in.
9001KN2••	57.2	2.25	44.5	1.75
9001KN3••	57.2	2.25	50.8	2.00

Individual Cut-outs Details
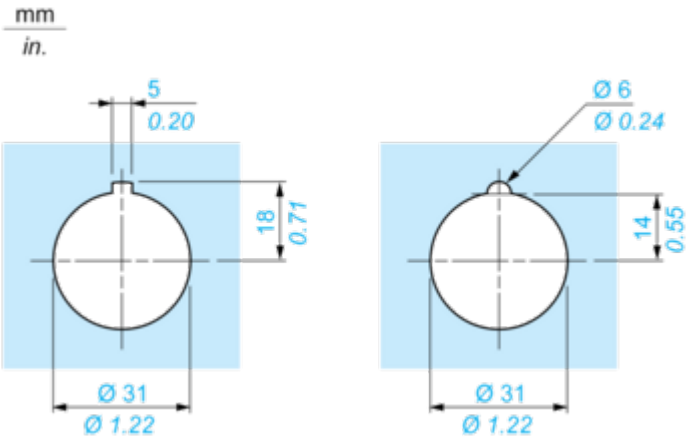
2 alternatives