# Product datasheet

Specifications

Green Premium™

## Modicon Quantum - high-speed counter module - 8 I - 100000 Hz

Local distributor code:

395516458 140EHC10500

To be discontinued on: 31 Dec 2030

To be end-of-service on: 31 Dec 2030

Discontinued - Service only

**EAN Code: 3595861000124**

## Main

| | |
|---|---|
| **Range Of Product** | Modicon Quantum automation platform |
| **Product Or Component Type** | High-speed counter module |
| **Number Of Channels** | 5 |

## Complementary

| | |
|---|---|
| **Number Of Inputs** | 8 |
| **Addressing Requirement** | 12 output words<br>12 input words |
| **Data Format** | 2147483647 dec 32 bits<br>65535 dec 16 bits |
| **Counting Input Voltage** | 30 V DC max |
| **Counting Input Current** | 7 mA |
| **Counting Input Type** | Discrete incremental counter |
| **Counting Frequency** | 100000 Hz |
| **Duty Cycle** | 1/1 counter input |
| **Discrete Input Current** | 5 mA |
| **Operating Threshold** | 15...30 V single ended mode 24 V REF DC at state on<br>3...5 V single ended mode 24 V REF DC at state off |
| **Discrete Output Number** | 8 |
| **Discrete Output Type** | Field Effect Transistor (FET) |
| **Discrete Output Voltage** | 0 V switch off DC<br>20...30 V switch on DC |
| **Load Current** | 0.21 A |
| **Maximum Leakage Current** | 0.1 mA state off |
| **Maximum Voltage Drop** | <1.25 V state on |
| **Isolation Between Channels And Bus** | 500 Vrms for 60 s |
| **Fault Type** | Loss of output field power |
| **Output Short-Circuit Protection** | Internal |
| **Power Dissipation** | >= 6 W |
| **Bus Current Requirement** | 250 mA |
| **External Power Requirement** | 19.2...30 V |

Disclaimer: This documentation is not intended as a substitute for and is not to be used for determining suitability or reliability of these products for specific user applications

| | |
|---|---|
| **Rack Type** | Local<br>Distributed<br>Remote |
| **Local Signalling** | 5 LEDs for channel status |
| **Marking** | CE |
| **Current Consumption** | <= 1140 mA at 24 V DC external power supply |
| **Module Format** | Standard |

## Environment

| | |
|---|---|
| **Resistance To Electrostatic Discharge** | 4 kV contact conforming to IEC 801-2<br>8 kV on air conforming to IEC 801-2 |
| **Resistance To Electromagnetic Fields** | 10 V/m 80…1000 MHz conforming to IEC 801-3 |
| **Ambient Air Temperature For Operation** | 0…60 °C |
| **Ambient Air Temperature For Storage** | -40…85 °C |
| **Relative Humidity** | 95 % without condensation |
| **Operating Altitude** | <= 5000 m |
| **Standards** | UL 508 |
| **Product Certifications** | RINA<br>UL<br>GOST<br>LR<br>CSA Class 1 Division 2<br>RRS<br>ABS<br>GL<br>DNV<br>C-Tick |

## Packing Units

| | |
|---|---|
| **Unit Type Of Package 1** | PCE |
| **Number Of Units In Package 1** | 1 |
| **Package 1 Height** | 4.6 cm |
| **Package 1 Width** | 16.0 cm |
| **Package 1 Length** | 31.0 cm |
| **Package 1 Weight** | 520.0 g |
| **Unit Type Of Package 2** | S03 |
| **Number Of Units In Package 2** | 7 |
| **Package 2 Height** | 30.0 cm |
| **Package 2 Width** | 30.0 cm |
| **Package 2 Length** | 40.0 cm |
| **Package 2 Weight** | 4.081 kg |

## Contractual warranty

| | |
|---|---|
| **Warranty** | 18 months |

## Sustainability

**Green Premium™ label** is Schneider Electric's commitment to delivering products with best-in-class environmental performance. Green Premium promises compliance with the latest regulations, transparency on environmental impacts, as well as circular and low-$CO_2$ products.

**Guide to assessing product sustainability** is a white paper that clarifies global eco-label standards and how to interpret environmental declarations.

Learn more about Green Premium >

Guide to assess a product's sustainability >

RoHS/REACh

## Well-being performance

| | |
|---|---|
| Reach Free Of Svhc | |
| Mercury Free | |
| Rohs Exemption Information | Yes |

## Certifications & Standards

| | |
|---|---|
| **Eu Rohs Directive** | Pro-active compliance (Product out of EU RoHS legal scope)<br>EU RoHS Declaration |
| **China Rohs Regulation** | China RoHS declaration |
| **Weee** | The product must be disposed on European Union markets following specific waste collection and never end up in rubbish bins |
| **Circularity Profile** | End of Life Information |

## Dimensions Drawings

### Racks for Modules Mounting

#### Dimensions of Modules and Racks

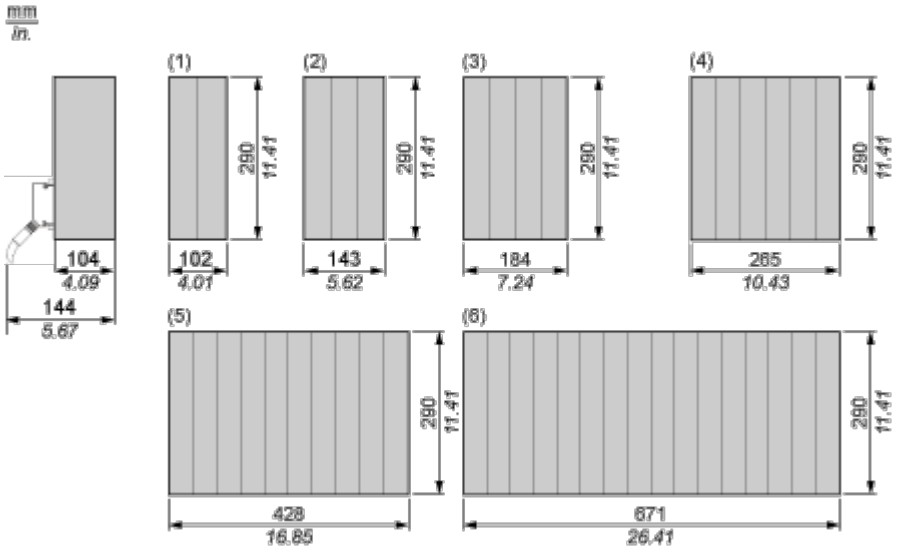


(1) 2 slots

(2) 3 slots

(3) 4 slots

(4) 6 slots

(5) 10 slots

(6) 16 slots

## Connections and Schema

### Five-Channel Discrete High Speed Counter

#### Wiring Diagram

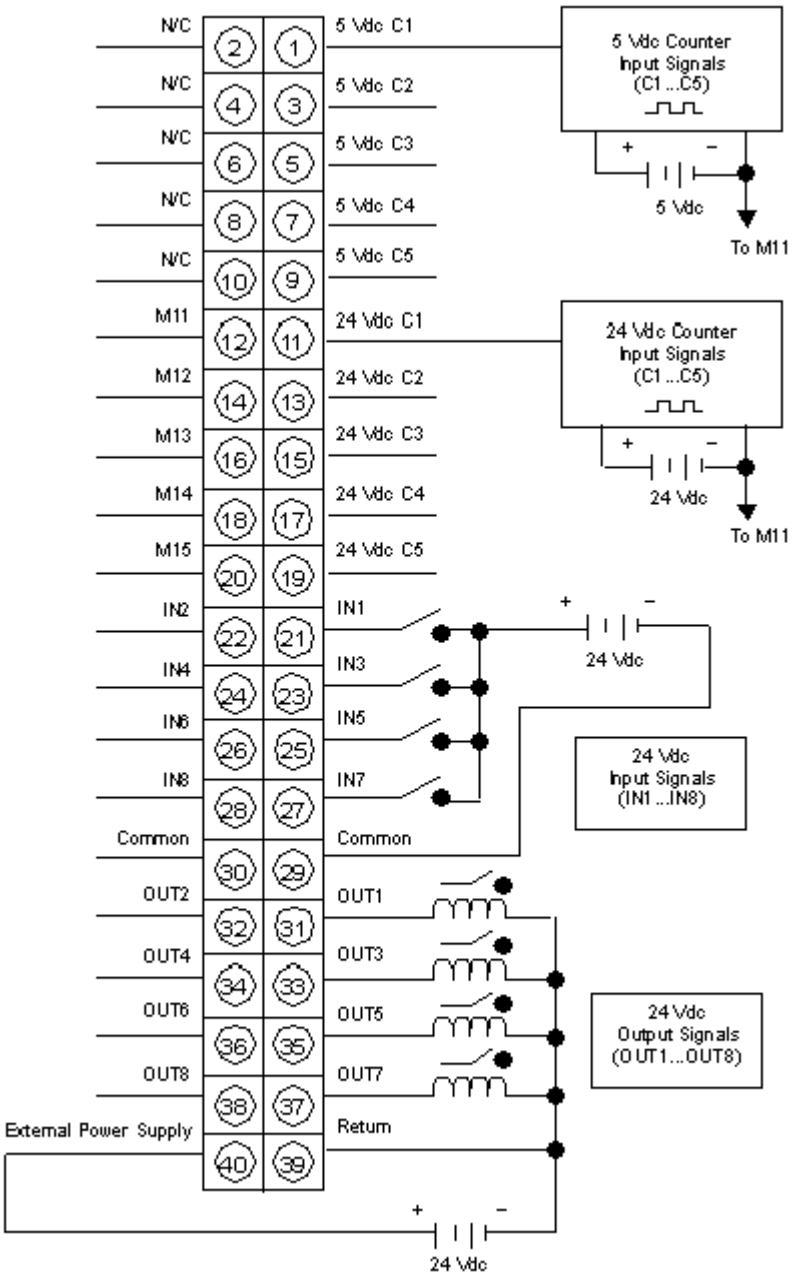


N/C Not Connected

Terminals 29 and 30 are jumpered together.